# VHFER

50 MC. AND UP

LEARN BY DOING

Volume 5, No. 2 March-April 1967


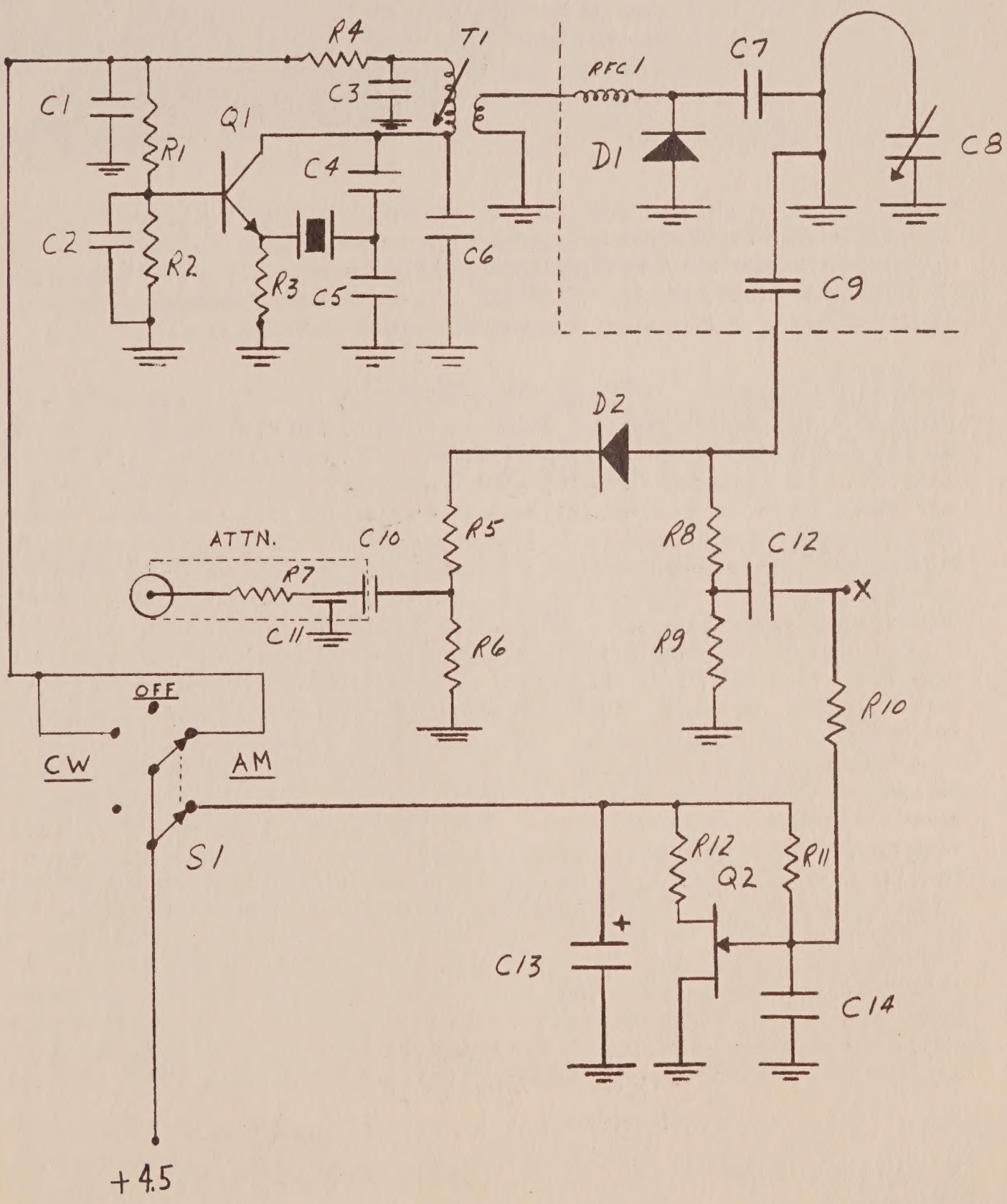


# 432 MC. SIGNAL SOURCE

## *Nuvistor*
# CONVERTER

- Noise Figure less than 3 d.b. over full 4 Mc. Bandwidth.

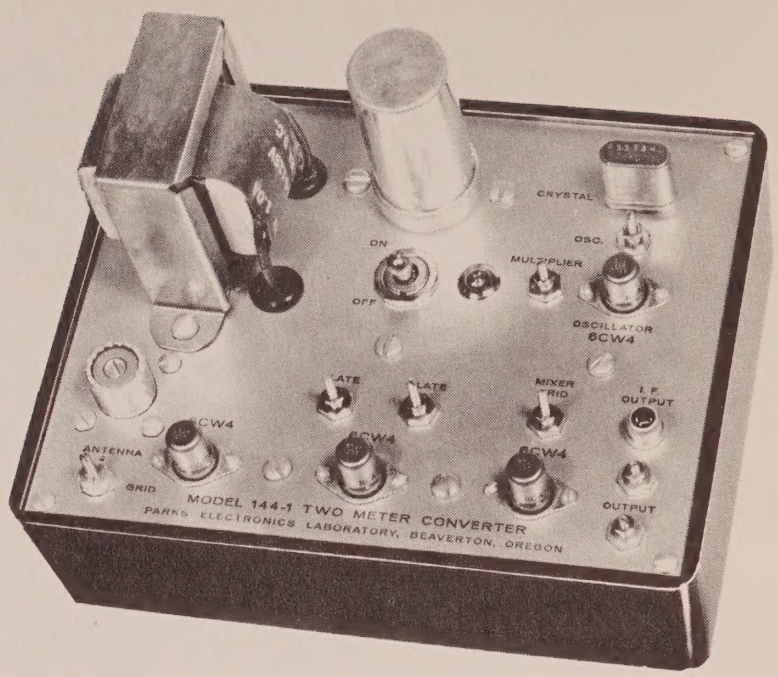


## $60.00 POSTPAID

Here is the converter that has been accepted by advanced hams all over the U. S. A proven performer for weak-signal work. I.F. ranges available put 144 Mc. at 7, 10, 14, 21, 22, 24, 26, 27, 28, 30.5 or 50 Mc. Choice of connectors: UHF in, phono out (shown) or BNC in and out. Available from stock.

Just think for a moment. How many brands of VHF converters are available today. Really there are only two principal manufacturers--one that sells through dealers and one that doesn't, (that's us). Yet if you look back in the ham magazines you'll see many ads of little companies that have made their little flurry, wild claims, and then laid down and died. Parks converters have been around for quite a few years. You don't stay in business if you don't have something people want. Of course hams talk to each other a lot, and they describe their equipment. A lot of the big DX names have Parks equipment--moonbouncers too. Give a listen on the bands and ask the DX boys about Parks converters. Many of you might think you'd be more likely to buy if we sold the converter as a kit at a lower price. No soap. We don't want our name linked with anything you put together yourself. I couldn't put one of our converters together and be sure of how it really was working--without test equipment. And 99.999% of you couldn't either. We've made many hundreds of converters and I can tell you for sure a lot of them don't tune up right at first. A little difference in the way a coil is wound can make the difference between making specs and not making specs., and there are a number of other things that happen. If you buy a Parks converter you know you've bought a standard of performance, that it's been aligned and the noise figure checked to prove the converter meets or exceeds the advertised spec. And if you keep your c.p. hands off the slugs it will stay that way for hundreds of listening hours. While tube failure can happen, it is surprisingly rare. The little nuvistor keeps its noise figure well and it tolerates r.f. leakage from your rig. If you're waiting for a transistor converter that works better than ours, you may have a long wait. A db. is about the most you could gain, and you can't hear that. A preamp. could always be added. Parks converters are on the shelf with same-day shipment being the rule. Prices are postpaid, $2.50 more for air mail.

**PARKS ELECTRONICS LABORATORY**

419 S.W. FIRST AVENUE

BEAVERTON, OREGON 97005

# Moonbounce Newsletter

by Victor A. Michael, W3SDZ
Box 345, Milton, Penna.

As I write this newsletter, the Crawford Hill VHF Club has just completed the first of two weekends of tests on 432 moonbounce. Two good two-way contacts were made with European stations, and the TIXM05 preamp (as described first and exclusively in the VHFER) was given a real system check.

The Crawford Hill group using the call W2IMU/2 and the sixty foot dish they have access to, were on the air for several hours on April 15th and 16th. On the 15th they had an hour QSO with HB9RG. Hans reported their signals 10db over the noise in his audio filter. HB9RG's signal peaked about 6db over the noise in a 300 cycle bandwidth. It was reported to me that HB9RG has permission to operate with two KW and was doing so during the tests.

On April 16th an hour contact was made with G3LTF. Both G3LTF and HB9RG were using relatively small dishes (under twenty feet) with parametric amplifiers in the front end. G3LTF also used the VHFER type TIXM05 preamp. The W2IMU signal was also copied well by PE1PL in Holland, but PE1PL was not copied well in the USA due to low transmitter power on the Dutch end.

I had a long conversation with Dick, W2IMU, after the tests and his report of echo tests is most interesting. The system consisted of the following: antenna--60 ft. dish with gain of 36 db, transmitter power--500 watts to the antenna. Receiver had a TIXM05 regenerative type preamp for the front end mounted about 30 feet from the feed antenna.

In addition to the QSO work, echo return tests were run. These tests began at the horizon and continued to the zenith. Echo returns were exactly the same in signal strength from the horizon to straight up. The conclusion of this is that there is no penalty or advantage to working on the horizon on 432. The test was also run to determine the effects of libration spreading on the return echoes. This is the effect I described before which shows up as a very rapid type of QSB on the received signal. It, in effect, puts holes in a two second echo pulse. This effect shows up worse at the zenith than at the horizon. While there was some increase in the effect at zenith, Dick felt it was small at 432 and would have an effect only on signals that were very close to the threshold in detection.

One other effect was observed by G3LTF which is of interest. The dish at Crawford Hill is El-AZ mounted and is linear in polarization, which means that the polarization is constantly shifting with reference to the equator of the moon. G3LTF has his dish on a polar mount. He found he had to rotate the dipole feed antenna in order to bring the W2IMU signal up to peak value. There is an important conclusion to be drawn from this test. From 432 up, it is important to make sure that your polarization is in agreement with the station you are trying to work if linear polarization is in use. This is another reason I have been an advocate for the polar mount. An

VHFER magazine is published every other month by Parks Electronics Lab., 419 S.W. First, Beaverton, Ore. 97005. Subscription rates: U.S. & possessions, $1.50 per year, Canada & Mexico, $1.75 per year, others $2 per year. Second class postage paid at Beaverton, Oregon 97005.

antenna on a polar mount that has polarization horizontal to the equator of the moon will also be lined up with any similar antenna anywhere in the world over the full moon orbit.

Dick also was able to check the TIXM05 preamp in a practical system for the first time. The results were exactly as predicted. In previous tests a paramp was used with all the refinements except cyrogenic cooling of the diode. The 50 cent transistor was slightly better due to the reduced feedline loss. In addition, they are now experimenting with two preamps cascaded, and measurements indicate even better results. One of the side problems that was feared did not in practice develop, i.e., front end overload from out of band signals. The antenna site at Crawford hill is line of sight to the New York metropolitan area with it's multitude of radio services, TV, radar and what have you. The little preamp gave an excellent account of itself with no cross modulation effects observed during the entire testing period. This confirms all the tests I did at my own hilltop QTH.

While the Crawford Hill group will continue to operate on 432 when enough interest can be shown by other groups, they are continuing their efforts to get a system going on 1296. This is perhaps a more significant development than you might at first think. If you stop to consider that a 50 per cent efficient reflector type antenna of 300 square feet can give you your own echo returns, it will probably be feasible to work against the sixty foot dish with something like a six foot dish. For anyone with a small antenna problem and no place to build a bigger one, 1296 has much to offer.

I will admit that equipment is somewhat of a problem for most, but it is indeed getting easier. Melabs has available for off the shelf delivery a circulator for under $100.00. Similar units were selling to labs a year ago for over $300.00. Several of my friends here on the East Coast have been working with water cooling of 2C39's and getting good increases in power dissipation. While there is some noise stirring about transistors, the paramp is still the best route to go if possible.

While the cylindrical parabola has been talked about a good deal, little has been done about a big one for amateur work. I'm currently building an experimental one 24 ft. by 16 ft. I should have results in about two months. Dick, W2IMU, who is a real live commercial antenna expert assures me the line feed is not the problem most amateurs think.

In closing, I would like to throw out a request for help. One equipment problem in moving to the higher moonbounce bands that require a paramp, is a stable pump source. While solid state sources are an expensive solution, a phase locked kyystron is a cheap solution for the amateur. If you have done any experimental work along these lines, I would appreciate knowing about it for my own use and the use by many who are struggling to get going at the higher frequencies. What I would really like to have is an amateur version of the HP phase locking unit that works over a wide range of microwave frequencies, and thus could be used with a wide variety of pump sources.

---

For the printers, VHFER is printed on a Davidson 241-W. Sometimes I print it and sometimes a friend who is a professional (and a ham) prints it. That's why you see such wide variations in quality. Our last mailing was 2022 copies. A few months back we were printing 2,000 and had 400 left over. Now our back issues are in pretty sad shape--mostly gone.

# 432 MC SIGNAL SOURCE

by Richard W. Stroud*

After recently completing the construction of a 432 Mc converter, I was again faced with the problem which at some time confronts most UHF hams--How do you go about alignment without expensive test equipment? The old standby of plugging an 8 Mc crystal into a grid dip meter and tuning up on the harmonic is okay for rough alignment, but not what you want for getting right into the noise. Also, at least in the midwest, you can't sit around waiting for a weak signal on 432 without growing old fast.

The end result was the construction of the 432 Mc signal source shown here. This unit has been used to align many 432 Mc converters, and has been used as a signal source for antenna gain and pattern tests. When not otherwise being used it makes a good calibrator for 432 Mc and sits in a handy location at the UHF operating position.

The unit is comprised of a 2N706 crystal oscillator, 1N3857 tunnel diode multiplier and 2N491 unijunction audio generator. It is housed in a home built 4-1/4" x 2-1/4" x 1-1/2" "minibox". It operates from a 4-1/2 volt battery and current drain is 4 MA.

Although the unit is built for 432, the only necessary change to hit 144 or 1296 Mc would be the substitution of a suitable inductor at L1. The tunnel diode puts out rich harmonics far beyond 1296 and the Q of the inductor should be high to pick out the desired harmonic of the 9 Mc drive.

Modulation is essentially a sawtooth, the frequency of which is determined by the time constant of R11 and C14. If sine wave modulation is desired, audio from a more sophisticated A.F. oscillator may be fed in at point "X" (remove R10); however, the method shown here is quite suitable for receiver alignment and has the advantages of being self-contained and drawing practically no current. Modulation using the resistor values shown runs about 30 per cent.

Construction of the signal source is straightforward. Just keep the leads short and don't overheat the tunnel diode during assembly. It is best to use some sort of heat sink.

A 2-1/2" x 1-5/8" x 1/16" thick fiberglass board with rivet in terminals is used for mounting the crystal oscillator and unijunction oscillator components. A similar board 1-1/2" x 7/8" is used to mount the diode modulator components. The oscillator board is supported by 5/16" metal spacers above the chassis and the modulator board is spaced 3/32" from one of the shield sections. A shield is used between the oscillator board and the tank coil L1. A second shield is used between the tank and the output attennuator. A piston capacitor is used to tune the UHF inductance to resonance.

Teflon press-fit feed through terminals are used to route the RF and modulation signals through the shields. The tunnel diode is supported by a standoff terminal mounted on a small bracket bolted to one of the shield positions. The grounded side of the tunnel diode is connected to a ground lug under the standoff terminal.

*Communications & Avionics Dept., Magnavox Company, Ft. Wayne, Indiana

The battery is mounted in a clip on the bottom cover of the minibox.

The piston attenuator is made of two telescoping sections of silver plated brass tubing 3/8" and 1/2" O.D. Two brackets are soldered to the 1/2" tube for mounting to the minibox with 6-32 screws. The inner section of the attenuator is 1-1/2" long and a "MNC" miniature panel connector is soldered into one end with a 51 ohm 1/4 watt resistor attached. A small button capacitor, C11, is soldered into the other end of the tube with the resistor lead sticking through the center of the capacitor. The resistor lead is then soldered and cut off. The outside capacitor tab is then bent back over the center terminal and aligned above a heavy wire lead extending from the junction of R5 and R6 (see photo). This forms capacitor C10. The output level is then determined by the ratios of the voltage divider made up of C10 and C11. The attenuator is adjusted by loosening the 4-40 screw and telescoping the piston to obtain the desired output.

If it is desired to operate the unit without the attenuator for antenna alignment or gain measurements, a BNC panel connector, UG1094, with a short length of bus wire attached to make contact with the output lead, is inserted into the larger tubing in place of the piston and is held with the 4-40 screw. This gives a 432 Mc output of about 100 microvolts which is about right for "weak signal" antenna alignment. A quarter wave length of heavy bus wire or other suitable antenna is then connected to the coaxial fitting.

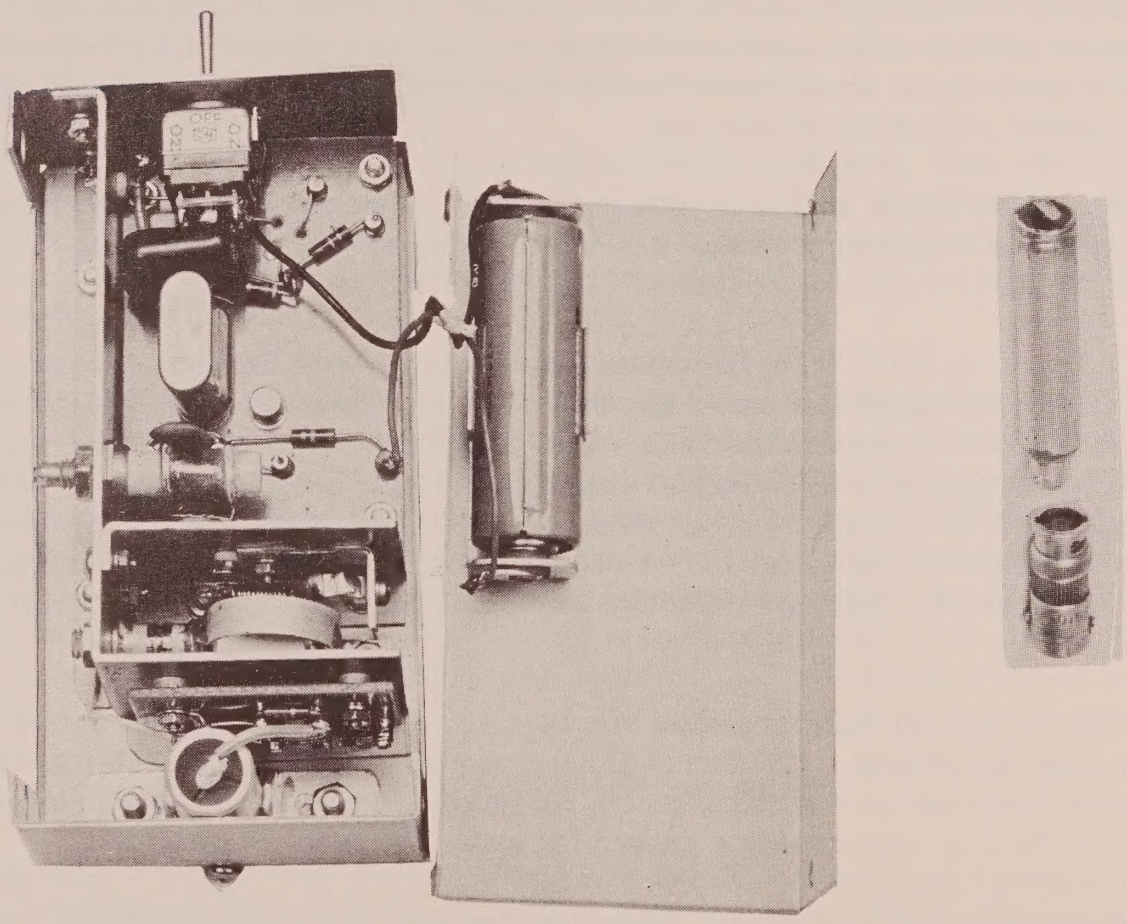

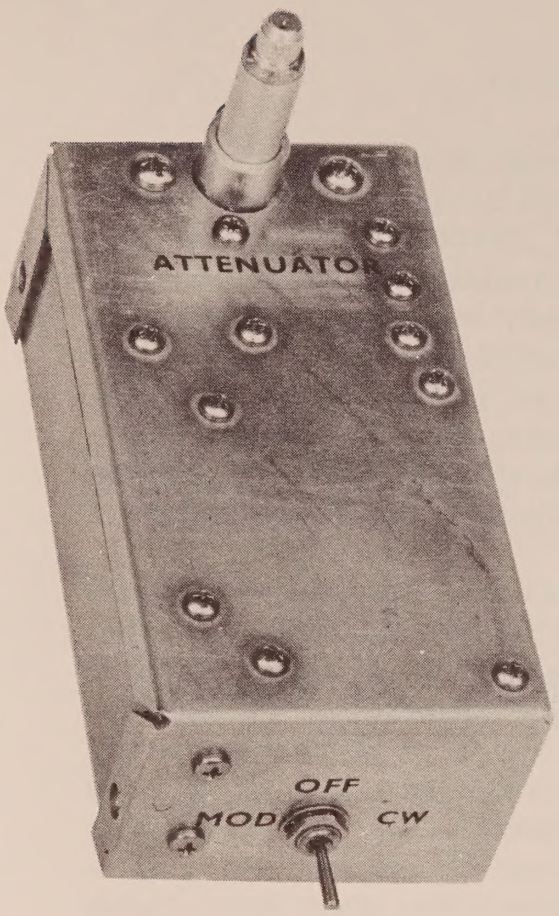


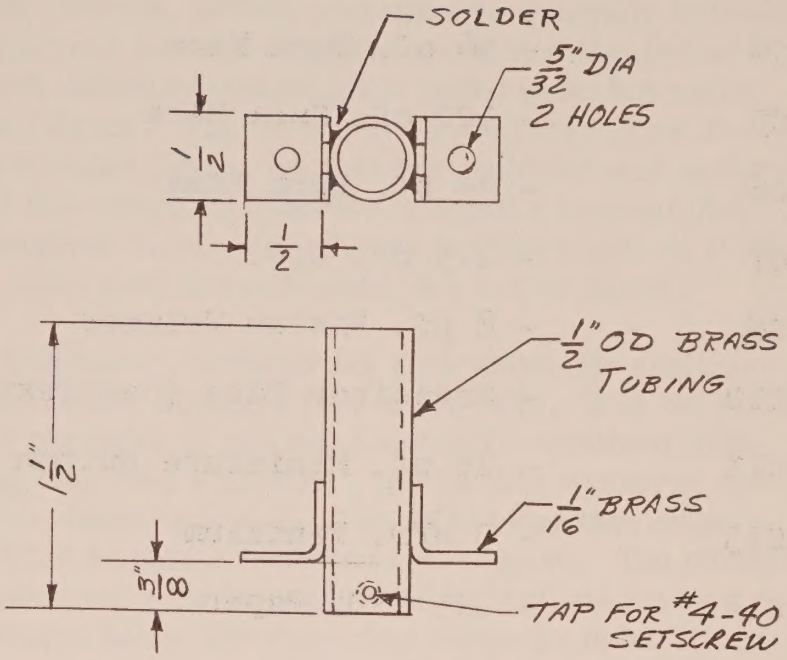


ATTENUATOR BODY
FINISH: SILVER PLATE

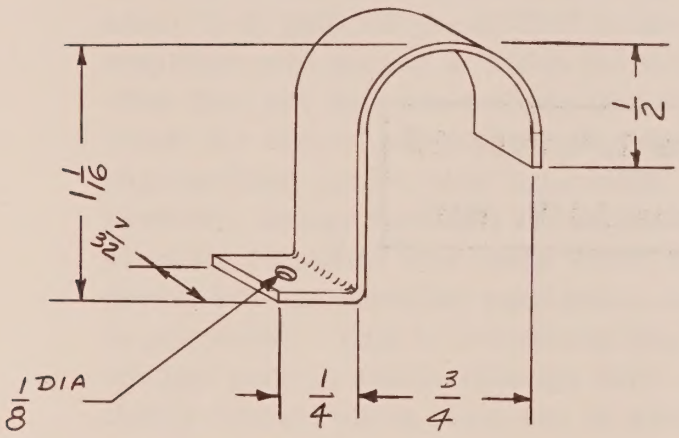


MATL: .032 BRASS
FINISH: SILVER PLATE

INDUCTANCE LINK L1

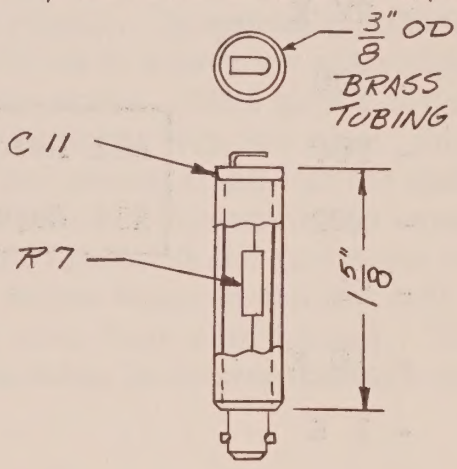


ATTENUATOR PISTON
FINISH: SILVER PLATE

The circuit diagram for the signal source is on the front cover. The parts list follows on page 8.

## SATELLITE LAUNCH TIME NEARS

OSCAR 5 may be launched early this summer according to an article in the May CQ. It will have a beacon at 145.95, a transmitting band between 145.880 and 145.920, a receiving band between 144.080 and .120. Frequencies in the transmitting band are inverted from those in the receiving band. 2 meter signals received are amplified and instantaneously retransmitted over a distance of several thousand miles (possibly) depending on the orbit. The satellite will operate continuously and has a life expectancy of about three weeks. If you're interested, see the article in CQ & get ready to go. An antenna you can point at the satellite will probably be of considerable help.

| | |
|---|---|
| C1, C2, C12 | - .01 Disc. Ceramic |
| C3, C9 | - .001 Disc. Ceramic |
| C4 | - 56 pf. Dura Mica |
| C5 | - 120 pf. Dura Mica |
| C6 | - 44 pf. Dura Mica |
| C7 | - 1.5 pf. Q.C. |
| C8 | - 8 pf. Piston Trimmer |
| C10 | - Capacitor Tabs (See Text) |
| C11 | - 15 pf. Miniature Button Feedthru Erie 2933-006 |
| C13 | - 5 MFD. Tantalum |
| C14 | - .25 MFD. Paper |
| R1 | - 12 K |
| R2 | - 27 K |
| R3 | - 300 |
| R4 | - 180 |
| R5, R6 | - 100 |
| R7 | - 51 |
| R8, R11 | - 10 K |
| R12 | - 1 K |
| Q1 | - 2N706 |
| Q2 | - 2N491 |
| D1 | - 1N3857 |
| D2 | - 1N341 |
| CR1 | - 9.000 MC Crystal |
| B1 | - Eveready 333 or Equivalent |
| S1 | - Miniature DPDT Center Off Switch |
| RFC1 | - 12 T. #26 Enamel Close-wound on 1/8" Dia. Phenolic Form |
| T1 | - $\frac{1}{4}$" O.D. Ceramic Form: Red Core: Pri- 24 T. #29 Soldereze: Sec- 4 T. #29 on Low End of Primary |
| L1 | - Output Tank Inductance .032 Silver Plated Brass (See Sketch) |

All Resistors 1/4 watt 5%

All Capacitors 10 V. Min.

# . . . . AND ANOTHER

by Donald L. Hilliard, WØEYE

Much has been written in the past couple of years about 432 Mc. preamplifier design. I have built several myself during the past several months. Included in these were ones using TIXM05, 2N2857, 2N3783, 2N3399, 2N2398 transistors. I usually followed an article in which the author claimed very low noise figures and stated the device's gain in db. I usually didn't have much difficulty obtaining the stated gain, but never was I able to obtain the claimed noise figure. This is not to say that the device described could not produce the claimed noise figure, but that one could develop serious doubts about it. It is the purpose of this article to describe in detail a preamplifier for 432MHz. that is capable of a measured 3.4 db noise figure and has a gain of 14 db. A block diagram (Fig. 1) shows the setup used in establishing the 3.4 db figure.

Motorola recently announced a new transistor, probably for UHF television applications, for which they claimed a typical noise figure of 5 db at 800 MHz. It is the AF239. I obtained two of these devices (PNP germanium) and was pleasantly surprised when I plugged one into an existing preamp that used a 2N3399. The 2N3399 measured 4.8 db when used in the first RF amplifier shown in Fig. 1. The AF239 was then substituted and the supply voltage adjusted for minimum indicated noise figure. The HP340B indicated 3.4 db. Noise minimum occurred with the supply voltage adjusted to between 10 and 12 volts. At supply voltages below and above this range the noise figure deteriorated, quite slowly however. This would seem to indicate that the noise match was about optimum. Gain under the above conditions should be about 15 db, versus about 10 db gain for the 2N3399 in the same circuit. Occasionally an article on a preamplifier will appear in which the author will claim a very low noise figure. More often than not they are devices that are regenerative. Often such a device can be adjusted for almost any noise figure desired, including very low ones. Controlling the regeneration can be quite frustrating when the preamp is put into the station setup however, unless the input and output impedances are essentially the same as they were when the amplifier was being tested for noise figure. Small variations can throw the device into uncontrolled oscillation and the device becomes useless until this condition is corrected. This is the reason why I shy away from such devices. The unit described here is stable although care must be taken in construction to assure that a tightly fitting bottom plate can be used.

The circuit is a straightforward common-emitter one. It is quite similar to circuits that have appeared often before. Care should be taken to keep a minimum amount of inductance in the emitter circuit. The emitter bypass capacitor is placed as close as possible to the transistor socket. Much has been said about whether or not to use a socket. If a transistor should go bad for some reason during a contact with a new state, for instance, and you wish to change it, you want to change it then, not later after the aurora or tropo has gone. This is the reason for using a socket. I don't believe there is any deterioration in performance in using one in this design. Figure 3 gives dimensions of the mechanical construction.

The circuit is designed so that polarity of the supply voltage may be reversed and an NPN transistor used if one desires to compare the merits of various transistors. The bias resistors are connected on top of the unit on the three feedthrough bypass capacitors. This arrangement makes it possible to vary the biasing easily.

Capacitors C4 and C5 may be any high-quality piston type with a maximum capacity of

* P.O. Box 563, Boulder, Colorado 80302

about 10 pf. Input and output connectors are UG1094/U. Capacitors C1, 2, 3 are solder-in type button micas. Figure 4 shows the dimensions of both the input and output circuits. The base tap on the input circuit is 3/16" above the antenna tap. The transistor case lead on the socket is soldered to the internal shield. This shield is soldered to the chassis on all edges. The bottom plate has 3/16" lips which are tapped for 4/40 screws.

If a noise figure meter is not available for checking the device out, a good quality noise generator may be used or the preamp may be tuned for best SN using a weak signal. The AF239 should be obtainable from any Motorola dealer. He may, however, have to order it out special from Phoenix as it is a new device and until there is more demand he may not carry it in stock. The price is about $2.20 in single quantities.

I wish to thank Gerry Reeve, WØKEI, for suggesting that I try this transistor and also for his suggestions and help in making the noise figure measurements.

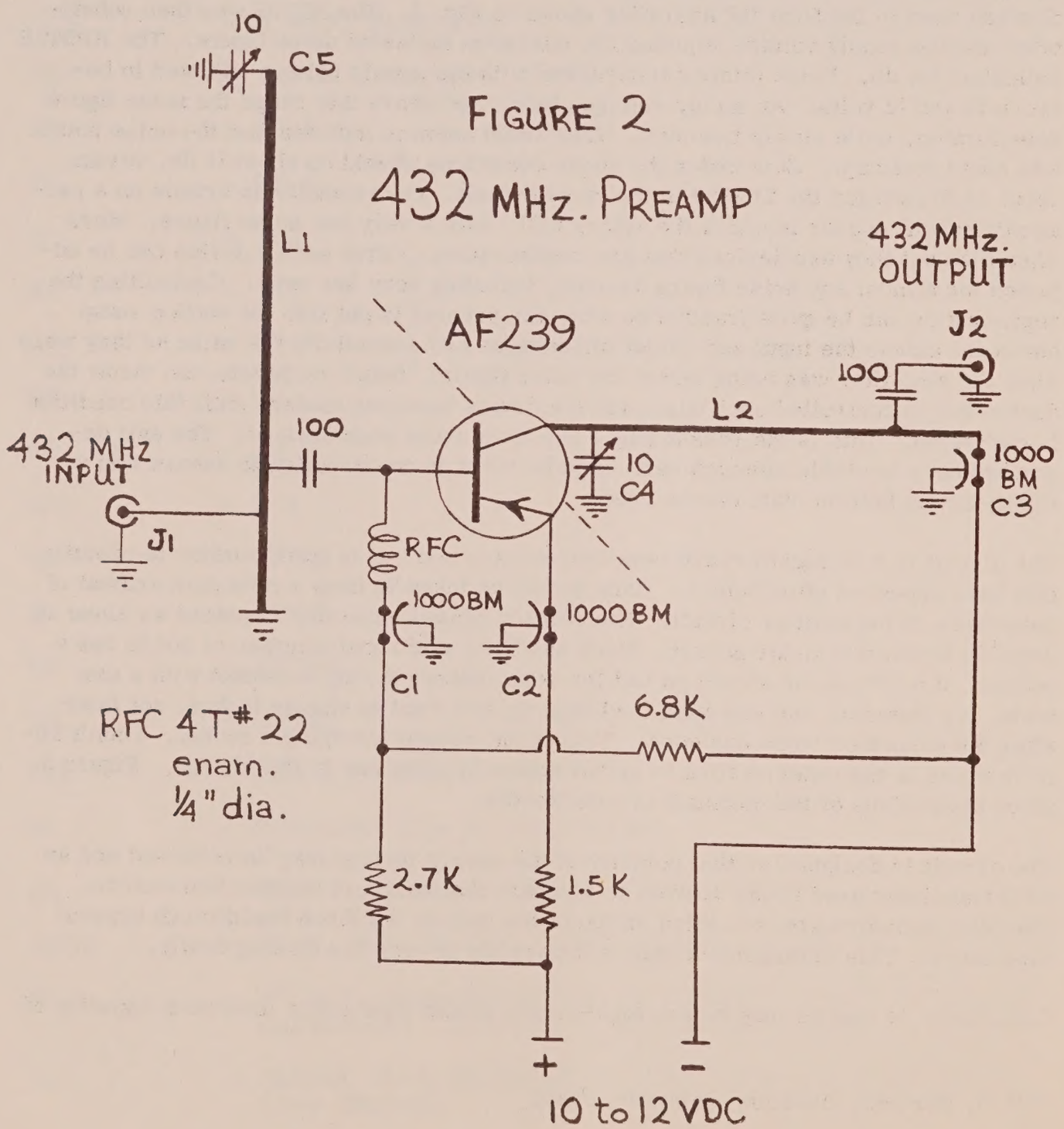

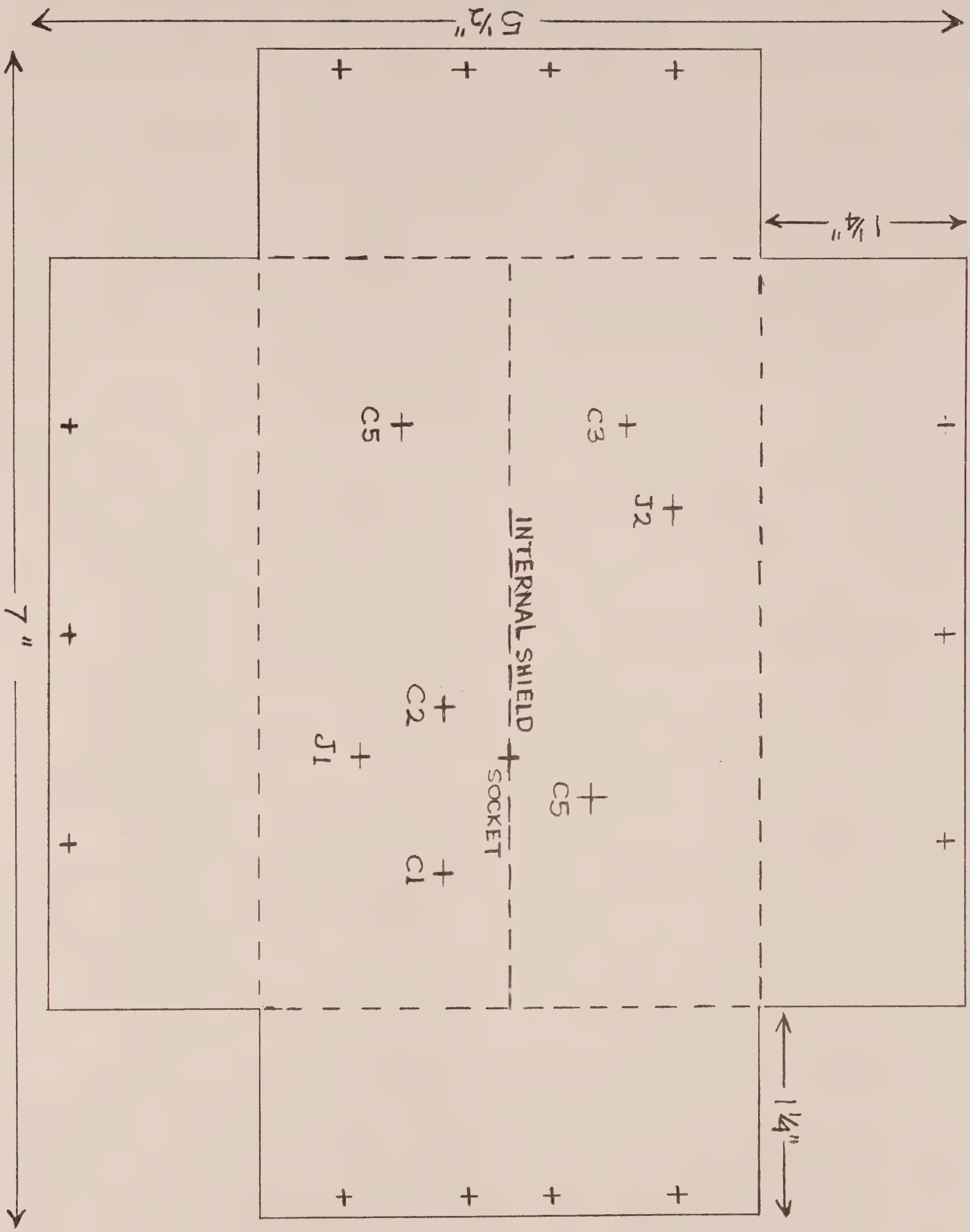


Fig. 3 Template for AF239 amplifier
Material 1/32" copper or brass
Bend 4 sides down

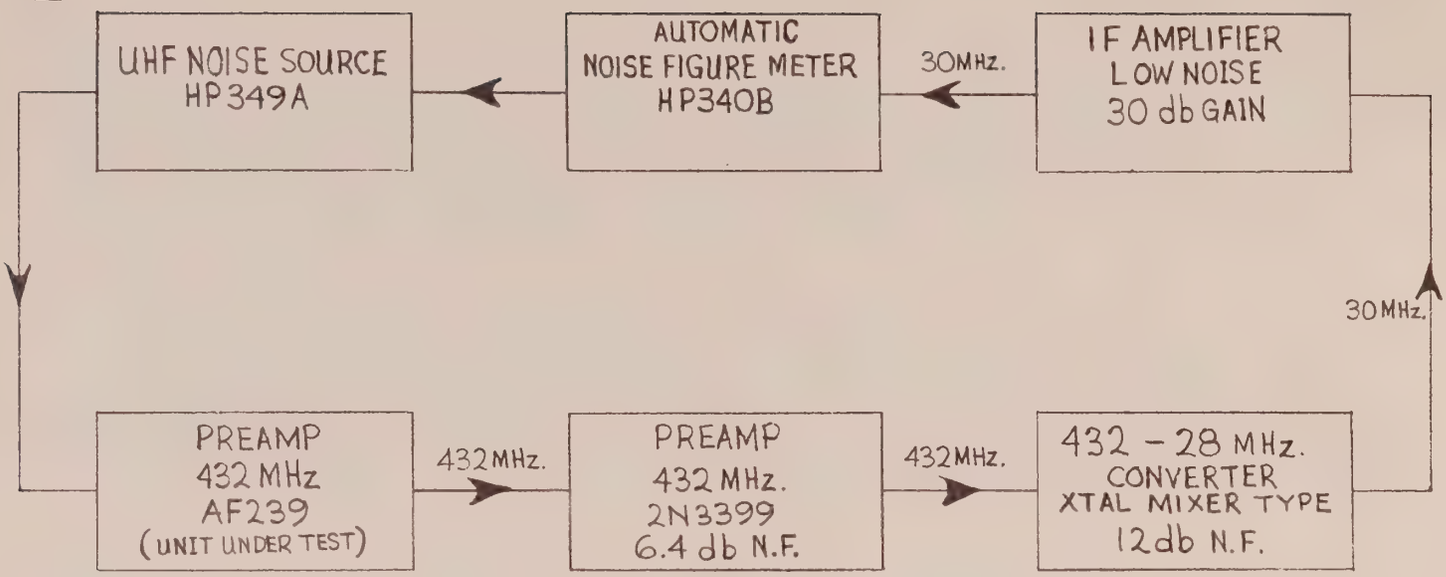


FIGURE 1

TEST SETUP USED

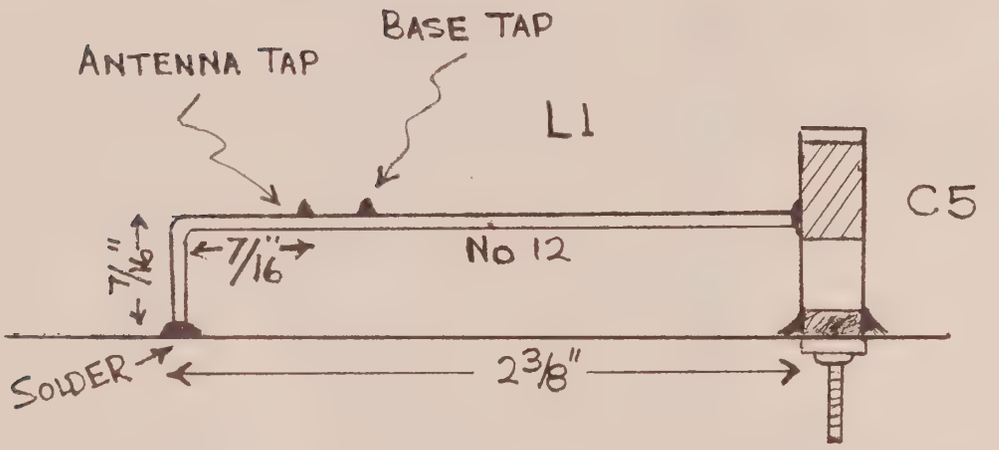


INPUT CIRCUIT

FIGURE 4

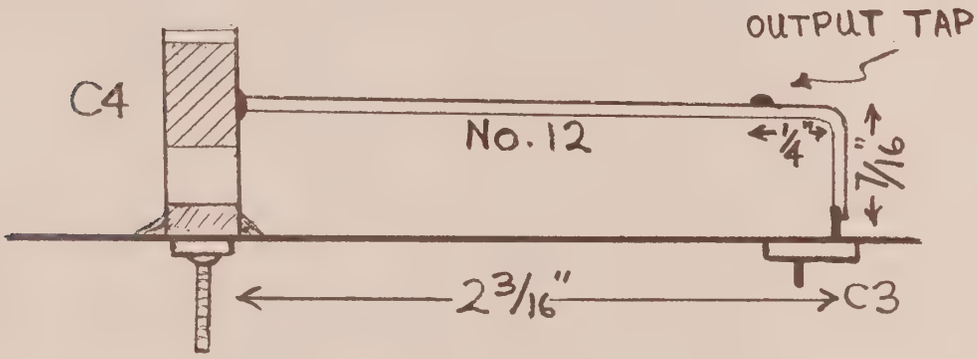


OUTPUT CIRCUIT

---

We would like to express our thanks to the three major ham magazines for their listings of our products in their New Products sections and for the kind comments we frequently see in the VHF columns of these and other ham magazines. I think they all know that catering to VHFers entirely is a bit rough. That free publicity helps keep our subscription level up around the "break even" level. Going to a magazine every other month has been a tremendous help. Getting higher level articles is not easy. The work is being done, but most of these people hate to write. We just couldn't get enough for a monthly publication. We get occasional letters asking us to take a stand for or against certain proposals or activities in hamdom. One policy we do have is to stay out of non-technical arguments. In other words, no politics. I am as opinionated as most of you but have my hands full and don't care to make enemies for VHFER. And as I see it, that's what would happen. We ain't mad at nobody.

# OPEN BANDS

by Marilyn Wiseman, K8ALO

Not much to report this issue, due to poor band conditions. With the upcoming June VHF QSO party reports should increase. Usually during contests some excellent contacts are made due to increased activity. So keep your ears open. Looking forward to your report. See you next issue. My address: Box 103, Petersburg, Ohio 44454.

50 MHz Scatter:

Feb. K7BBO(Wash.) wrked K6RIL, K6IBY, K6JC, W6YKM, W6NLZ, W7UFB, WØEYE. K7ICW (Nev.) wrkd K6RIL, K6GJD, K6IBY, WA5FDJ, hrd W7UFB, WAØBLM, W5SFW, W5EUB wrking WA7FLB WØINA wrking WA7RVW.

March K7ICW(Nev.) wrkd W6NLZ, K6GJD.

144 MHz:

Feb. 5-26: K7ICW(Nev.) wrkd W6NLZ, K6GCD/6, WB6RRR/6, W6YVO, K6TSK, W6WSQ, K6HAA, W6DQJ, K6MBY, W6DNG.

Mar.5-28: K7ICW(Nev.) wrkd W6YVO, W6DNG, W6NLZ, W6DQJ.

144 MHz Meteor Scatter:

Feb. 6-7 K1ABR(R.I.) hrd WØNXF. Dick says daily m/s (random) with K4QIF (0800-0815) continuing. Dick hears him every day. Distance approx. 650 mi.

144 MHz Aurora:

Feb. 8 K1ABR(R.I.) wrkd K2GUG 450 mi, hrd W8DEO.

432 MHz:

Feb.12-26 K7ICW(Nev.) hrd W6DQJ 225 mi with no QSO resulting.

Mar.12-19-26 K7ICW(Nev.) hrd W6DQJ again no QSO accomplished, hrd both ways.

Mar. 28 K7ICW wrkd W6DQJ, finally good results in two-way QSO after about a year of effort.

Skeds Wanted

K2DNR Sam Popkin, Augusta Drive, Hopewell Jct., N.Y. 12533 looking for tropo and m/s skeds. Interested in Wisc., Ky., N.Carolina, S. Carolina and greater. Sam has 16 states with 120 watts. 11/11 yagis. 416B into BC 312. Freq. 144.012 1 Kc. Any reasonable hours good between 800 PM and 600 AM EST. Phone NR 914-226 5369.

WØNXF Bob Berk, 5218 Prescott, Lincoln, Neb. 68506 wants skeds for All showers. Major, Minor or Sporadic are welcome. Freq. 144.022 MHz.

K7BBO Dave Robinson will be portable 7 in Lewiston, Idaho June 8-18th. Will be running 1 Kw on both 6 and 2 meters. 6 meter SSB freq. 50.110 MHz. CW freq. 50.006 MHz. 144 MHz freq. CW and AM 144.086, 145.048. Dave will run skeds with anyone who needs Idaho either 6 or 2 meters. He will be on for June VHF contest

on 4000 ft. mountain. Also on 75 meter freq. 3815 for anyone wanting last min. skeds.

W9DID Bob Sabon, 817 W. 34th St., Chicago, Ill. 60608 CW beacon will be operating on May 7, 14, 21 and 28th. Bearing: Boston, Mass. 1300 GMT to 1330 GMT. Dallas, Texas 1330 GMT to 1400 GMT. First 15 mins. transmitting on 32 ft. yagi, second 15 mins. transmitting on 4-15 ft. yagis (stacked array.) Freq. 145.002 running 500 watts. All reports QSLed.

K1YLU Gary Tater, 40 West St., Leominster, Mass. will be portable 1 western Mass. from Mt. Wachusett. Looking for skeds for June VHF QSO party with Ohio, W.Va., Md. and Del. for 6 and 2 meters, N.J., Pa., W.Va., and Del. for 220 and 432 MHz.

K1ABR Dick Bromley, 12 High View Drive, Cranston, R.I. 02920 still looking for 50 MHz scatter skeds Sun. morn. 0700-1000 EST. CW or SSB. Rig KW xtal conv. HQ 180 6 element wide-spaced beam, looking west and southwest. Also wants 144 MHz skeds. Rig is KW, ant. 32 element colinear, 717 A HQ 180.

Editor's Note: Listing in SKEDS WANTED is limited to those interested in meteor work, scatter or long-haul tropo work over difficult paths. You must supply information on your rig, antenna and anything else that would tend to show prospective skedders that you have an outstanding station. The aim of the listing is to help further the VHF art, giving those who want to do the difficult an opportunity of finding a similarly motivated ham at the right distance.

## ODDS & ENDS

This seems an appropriate time for me to blabber on about a couple of points. First is the role of the big dish in moonbounce and distance records. I don't know that A.R.R.L. has set a policy about moonbounce and what records count and what ones don't. It hardly seems that a person who by nature of his job has access to a big dish and uses it for a moonbounce contact merits a listing in the record column of QST. Such work is commendable and does a lot to further the art--no doubt about that. It lets hams with equipment not quite up to par know how many more db they have to pick up. And it gives encouragement. Surely the psychological effects of the big dish at Arecibo(and Stanford and Bell Labs) were tremendous. But somewhere it would seem that A.R.R.L. has to draw the line and say what constitutes an "amateur" effort. Lets go back to the first amateur moonbounce that was a recognized two way. This was between Sam Harris & hams at Eimac. Perhaps you had the same thoughts as I--Sam had a big dish (30 feet I think) and I figured connections with some manufacturer of same gave him a really unfair advantage over us common people. But on visiting his place and talking to others I found I was all wrong. A friend of his had spotted that dish in a junk yard. Sam bought it for $150 I think, and some more for the mount which I don't think was used. The equipment of course he built. Everything was on his property. Certainly there is nothing in that situation anyone could criticize. At Eimac the boys had a rather small dish they had gotten surplus and they built the rig by paralleling a bunch of 2C39s. It was on Eimac property--and as far as I could see that was the size of Eimac's influence. No criticism there. That was a two-way amateur effort and a history-making one. K6MYC's antenna is described in this issue, and so was VK3ATN's some time back---strictly amateur all the way. W6DNG-OH1NL, again amateur all the way. W6DNG's latest contact with F8DO in France may be another "all amateur" contact.

It would seem that A.R.R.L. should soon decide, if they haven't already, what constitutes a true amateur achievement. Should they decide that moonbounce done at commercial or military installations does not count for distance records perhaps amateurs without access to such facilities will be more highly motivated to go to the considerable effort required, furthering the amateur art.

## USA 144 MHz DX OPERATING FREQUENCIES

Three decimal place listings are assumed to be ±500Hz, four places ±250Hz. VFO and VXO listings are assumed to be within ±750Hz.

| Call | State | Freq. | Call | State | Freq. |
|---|---|---|---|---|---|
| K6GCD | Cal. | .002 | W9WDD | Ill. | .050 |
| K2GUG | N.J. | .003 | WØYMG | Kans. | .050 |
| W4WNH | Ky. | .003/.099 | W7RQT | Utah | .055 |
| W3BYF | Pa. | .005 | WØEKZ | Kans. | .055 |
| W9JGQ | Ill. | .005 | W7OKV | Oreg. | .060 |
| WB6KAP | Cal. | .009 | WØBJV | S.Dak. | .075/VFO |
| W7JRG | Mont. | .009 | WA9DOT | Wis. | .082 |
| WØJYC | Colo. | .010 | K1BKK | Vt. | .085 |
| W5HFV | Okla. | .011 | K5WXZ | Tex. | .085 |
| W5UGO | Okla. | .011 | K7BBO | Wash. | .086 |
| K6HMS | Cal. | .011 | W9BRN | Ind. | .087/VFO |
| W2AZL | N.J. | .012 | WA5FMZ | N.Mex. | .088 |
| K7ICW | Nev. | VFO/.013 | K5TQP | N.Mex. | .088 |
| K9UIF | Ind. | .013 | W5GVE/4 | Ala. | .088 |
| W4FJ | Va. | .015 | K7NII | Ariz. | .090 |
| W1AZK | N.H. | .016 | W9UNN | Ill. | .090 |
| K4QIF | N.Car. | .018 | WØEOZ | N.Dak. | .100 |
| K2HLA | N.Y. | .019 | WØLER | Minn. | .100 |
| K6HAA | Cal. | .020 | W5UKQ | La. | .105 |
| K6LEW/5 | Tex. | .020 | WØBFB | Ia. | .110 |
| W7FS | Wash. | .020 | W7UFB | Wyo. | .113 |
| K1OYB | Me. | .021 | W7MFP | Utah | .120 |
| W5ORH | Okla. | .022 | K8AXU | Ohio | .125/VXO |
| W7OUE | Ariz. | .022 | W8TIU | Mich. | .125 |
| K7ZIR | Oreg. | .022 | W5JWL | Ark. | .132 |
| WØNXF | Neb. | .022 | W5RCI | Miss. | .1485 |
| K4EJQ | Tenn. | .026 | W4TLV | Ala. | .153 |
| WØJVB | Mo. | .0275 | K1ABR | R.I. | .175 |
| W6GDO | Cal. | .0280 | WØLCN | Minn. | .180 |
| W8PT | Mich. | .030 | WØCUC | S.Dak. | .189 |
| WØENC | S.Dak. | .033 | KØMQS | Ia. | .200 |
| W5ML | La. | .035 | WAØFDY | Minn. | .210 |
| K9AAJ | Ill. | .036 | W8BKI | W.Va. | .257 |
| K6KV | Cal. | .040 | W8KAY | Ohio | .300 |
| K9FGD | Ill. | .040 | WØLFE | Mo. | .355 |
| WØEYE | Colo. | .042 | K7MKW | Ida. | VFO |
| W1JSM | Mass. | .046 | WØDQY | Mo. | 145.0415 |

Note: This list was compiled by Al Olcott, K7ICW. For corrections or additions write to Al at 510 S. Rose, Las Vegas, Nevada.

With spring coming on before too long we are expecting more activity to bring on more articles. We have a few hanging fire because of something not being clear or other things that might impede full utilization of the article. There are really very few articles turned down. My feeling is that garbage attracts garbage so we try to screen things fairly well without being dictatorial. We know full well that errors do creep in and that in some cases the author has been all wet on a point or two. But no one here pretends to know all the answers so as with any ham articles you take your chances when you build from them.

## K6MYC MOONBOUNCE EFFORTS

The following is taken from a letter from Mike Stahl, K6MYC, who made a successful two-way moonbounce contact with VK3ATN in Australia using a 320 element colinear array mounted on a hillside near Stanford Univ. The antenna has been divided into two parts, half being with Mike at his home QTH and the other half with Victor Frank, WB6KAP (ex W7QDJ) in Woodside, Calif. in the hills above Stanford.

"Last month WB6KAP, using the other half of the big 320 element colinear array, was heard well enough by Ray, VK3ATN, to make a contact. No contact was made as Vic heard nothing. We, using a borrowed 75A3 & Parks conv. with a 2N4417 FET preamp did hear Ray's signals weakly and also Vic's echoes. Since that time we've been using our own receiver SB-34 and homebrew conv. & same preamp without success. We, WB6KAP & I and sometimes W6GDO (Jay), have had several skeds with F8DO (Marius) and 2 skeds with SUlAB (George), both of whom have received their own echoes. Of course you know of F8DO's success with W6DNG. The results of these tests have been mostly negative. Only F8DO reported that he has heard my signals weakly on two occasions. The last two skeds with Ray, VK3ATN, were again more successful. Vic was heard by Ray for 18 minutes and again good copy. Because of calibration problems we got on the wrong frequency about 2.5 kc. low. WB6DEX (Ross) reported hearing signals on 144.0885 which would have been us. Ray also heard signals but on two of his transmission periods which again was probably me (I also had a time problem.) Ray also reported hearing Ross' signals but weakly so he concentrated on Vic's sigs.

I've gradually been working out the bugs and have straigntened out many of my problems. Last nite after diddling the receiving system down to 2 db noise figure I received my own echoes. Bandwidth was 2.1 kc. and echoes peaked to about 2-3 db. over noise. I found for some reason yet unknown I could not hear my echoes thru my 100 cycle audio filter---accidentally heard them coming thru the speaker unfiltered. Power was just under a k.w., probably 500 watts to the antenna. The antenna presently is switchable polar or AZ-EL mount, with no AZ-EL limitations and a 36 degree elevation minimum in the polar mount.

That should bring you up to date, Loren. I must mention that WA6MIA (Ed) has helped me a great deal and provided some of the gear that I lacked. Next month results should be better all around and we'll keep you posted as to the results. See you in Fresno May 6 & 7. 73 Mike " Note: VHF convention at Tropicana Motel (Hiway 41). Serious VHF enthusiasts invited. No fees.

Published by Parks Electronics Lab.
419 S.W. First
Beaverton, Ore. 97005

JOHN G. TROSTER 8-67-1
45 LAUREL AVENUE
ATHERTON, CA. 94025

Return Requested